MATH
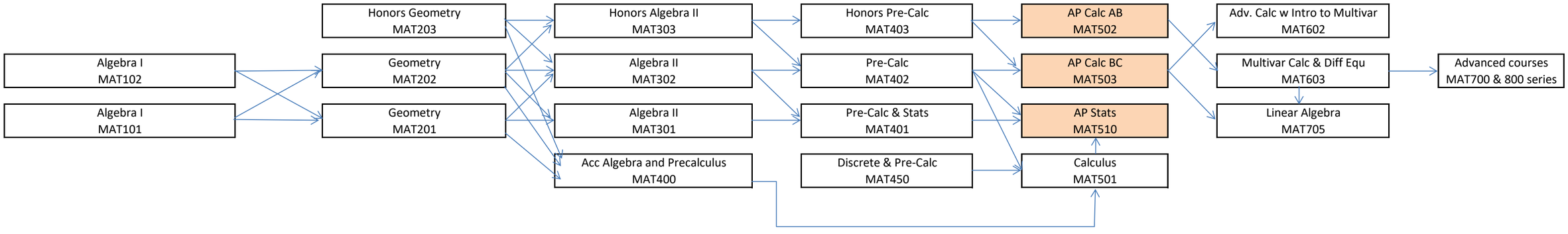
Orange blocks = Course prepares students for the AP exam